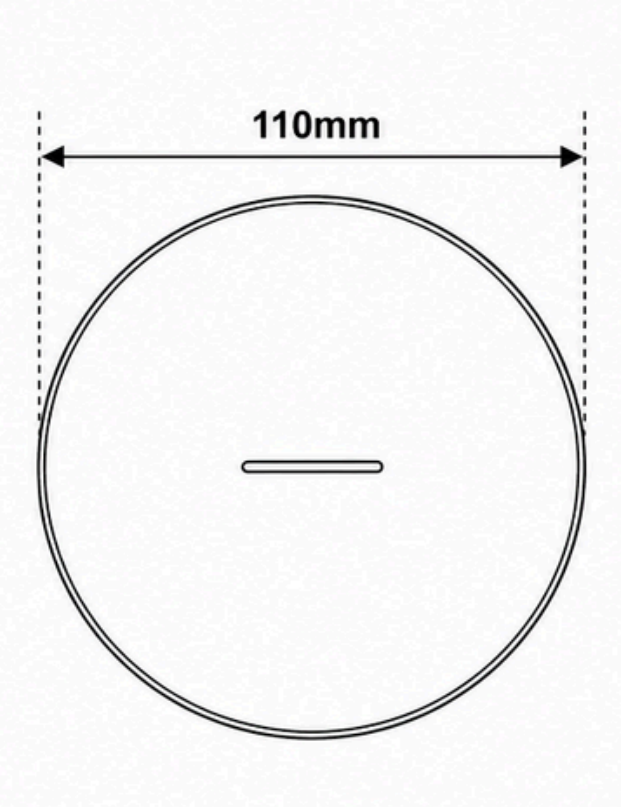

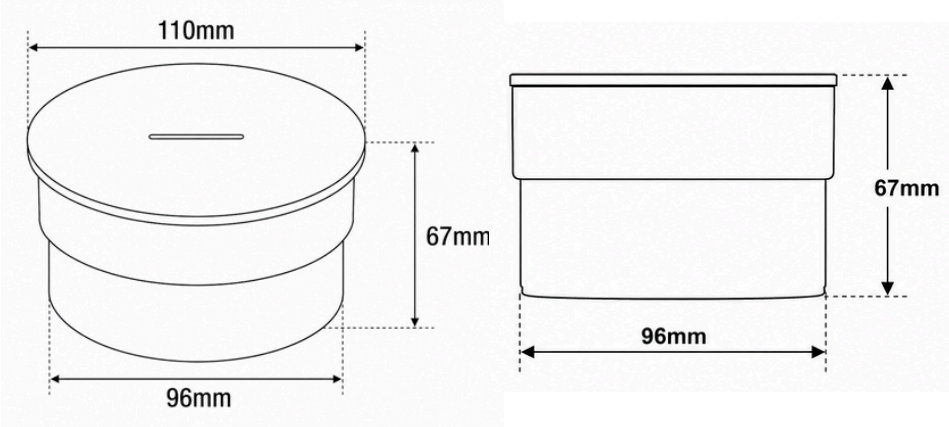

DOBIDOS
KOREA

TYPE :

CO-517 Accessories