DAELIM

SPECIFICATION SHEET

DOBIDOS by DAELIM

FB1667 Rain Shower Faucet With Shelf

Material : Brass, Chrome Coating

Technical Drawing

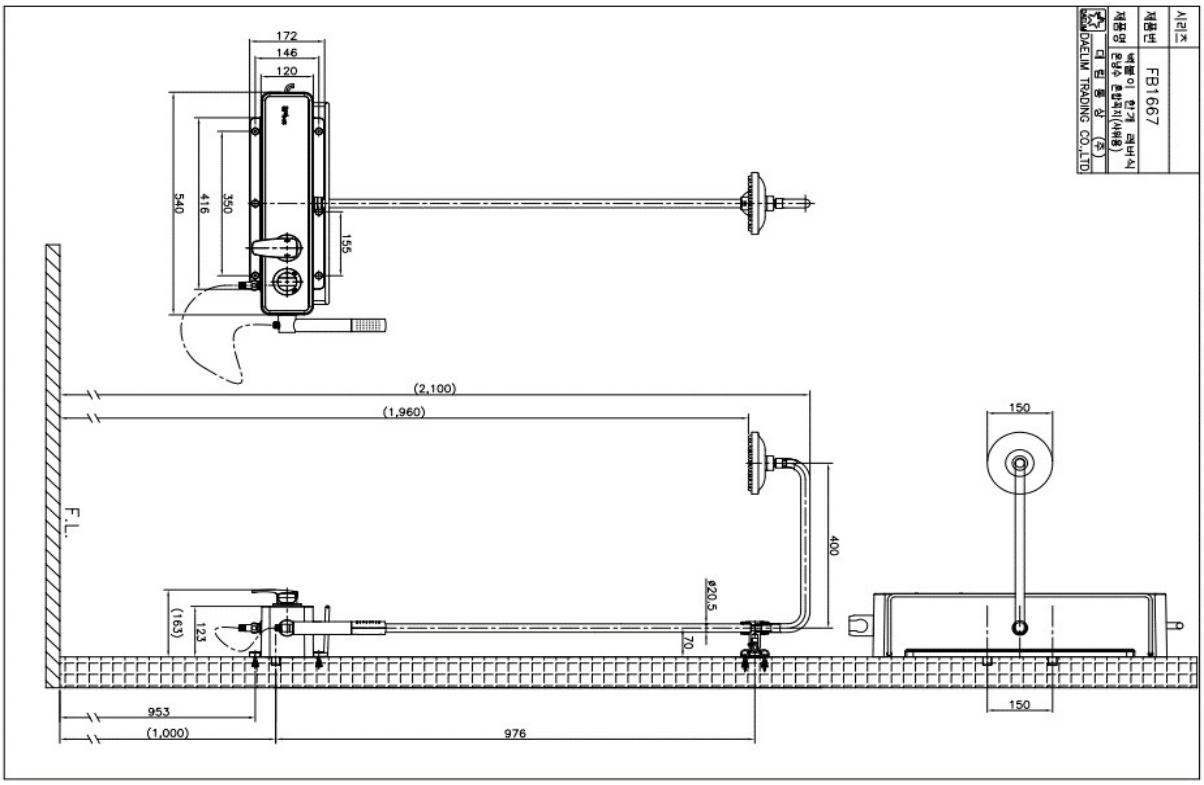

Some specs and products may not be available in your area.
You check with your nearest resller for the newly updated prices.
Please visit at www.daelim.id for your more information