DAELIM

SPECIFICATION SHEET

DOBIDOS
KOREA

FB 1700C Bath & Shower Faucet

Dischargeing Volume : 2L

Material : Brass, Chrome coating

Technical Drawing

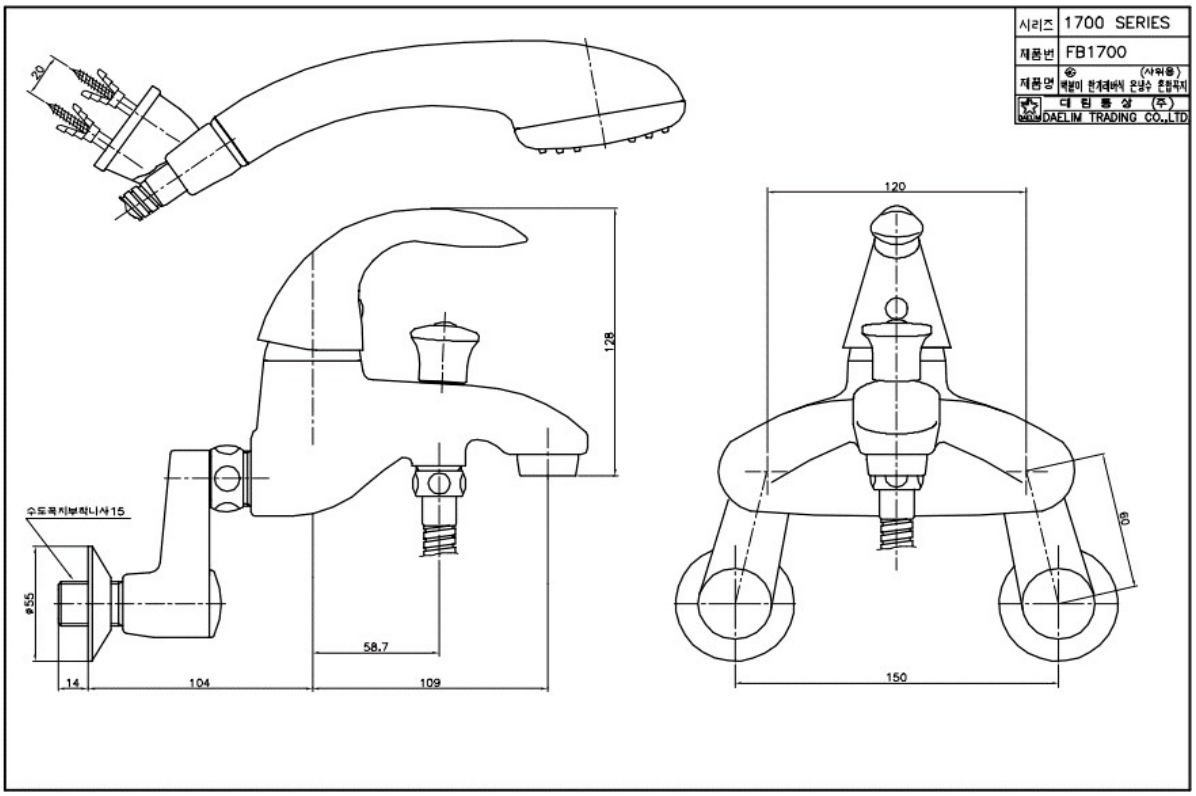

Some specs and products may not be available in your area.
You check with your nearest resller for the newly updated prices.
Please visit at www.daelim.id for your more information