DAELIM

SPECIFICATION SHEET

DOBIDOS
KOREA

FB 0200NC Shower Faucet

Discherging Volume : 2L

Material : Brass, Chrome Coating

Technical Drawing

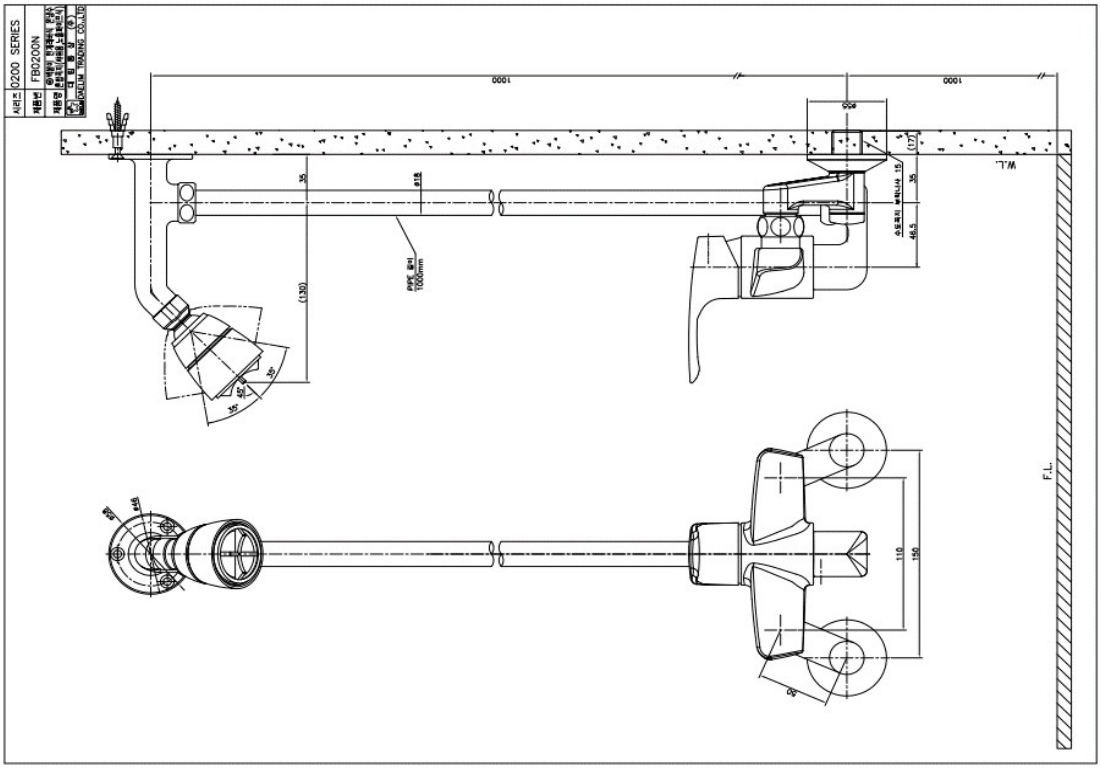

Some specs and products may not be available in your area.
You check with your nearest resller for the newly updated prices.
Please visit at www.daelim.id for your more information