DAELIM

SPECIFICATION SHEET

DOBIDOS
KOREA

DL-710SS Semi Recessed Lavatory (Soap Holder)



Size :530(W) X 430(D) X 175(H)

Material : Ceramic

Technical Drawing

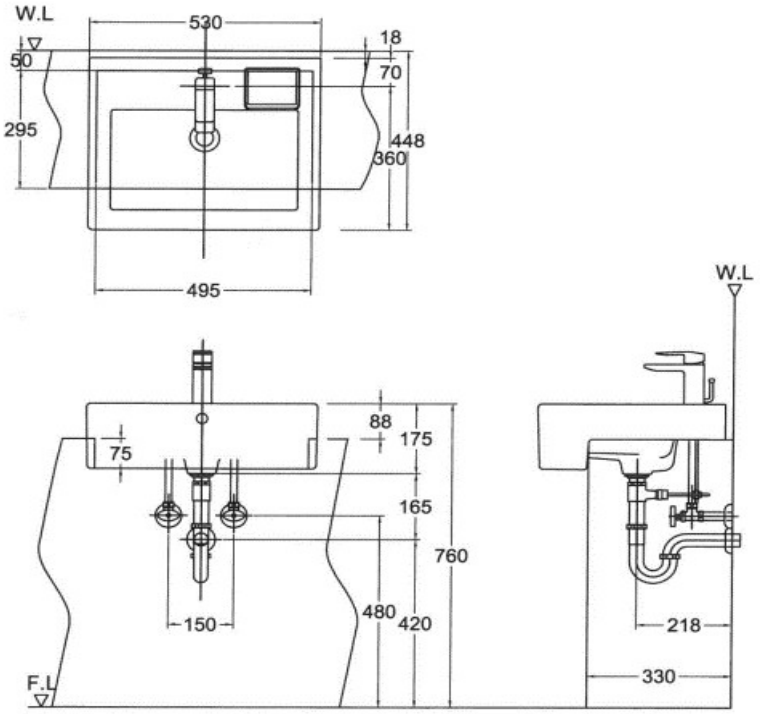

Some specs and products may not be available in your area.
You check with your nearest resller for the newly updated prices.
Please visit at www.daelim.id for your more information